Data Sheet

Article number: 2046980V12F
Description: E+G Crank handle
DIN 469-80-V12-F

Measures

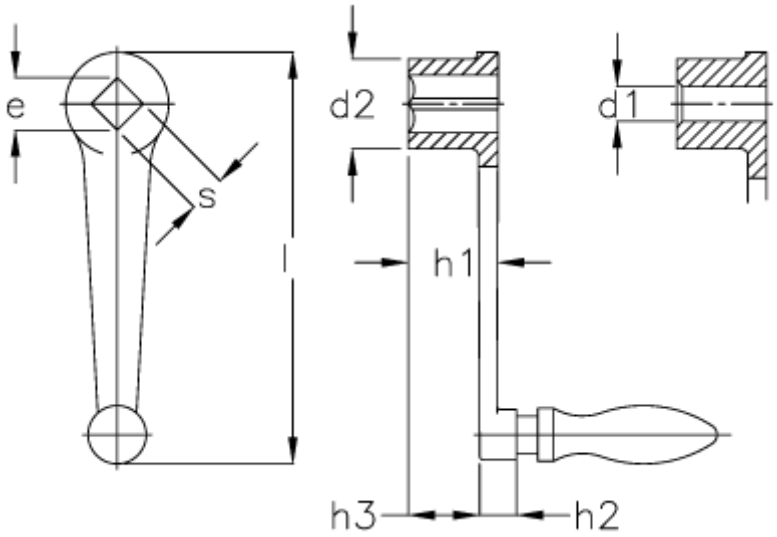

D	= 24
d H7	=
H	= 18
H2	= 13
l	= 24
L	= 102
s H11	= 12
Weight	= 170

Product drawings and brochures of any kind may contain errors for which Brd. Klee A/S cannot be liable.